Environment Protection Engineering

Vol. 41 2015 No. 4

DOI 10.5277/epe150410

MOHAMED A. ZYTOON[1, 2], AHMED H. EL-SHAZLY[3],
MADBULI H. NOWEIR[4], ABDULRAHEEM A. AL-ZAHRANI[3]

BIOLOGICAL TREATMENT OF HYDROGEN SULFIDE IN AN AIRLIFT BIOREACTOR WITH DIRECT GAS INJECTION

Bioconversion of H_2S into elemental sulfur has been investigated using an airlift bioreactor with direct injection of the gas into the bioreactor. Almost complete removal of H_2S has been achieved at its inlet concentrations lower than 25 000 ppm. Maximum bioconversion capacity of ca 111.3 g/(m^3·h) and up to 93.5% conversion of the inlet sulfide to elemental sulfur was obtained. To further improve the bioreactor performance, factors influencing mass transfer and biological activity should be investigated in future studies.

LIST OF SYMBOLS

BC – bioconversion capacity, g/(m^3·h)
LR – H_2S loading rate, g/(m^3·h)
RE – H_2S gas removal efficiency, %
C_{gi} – inlet H_2S gas concentration, g/m^3
C_{go} – outlet H_2S gas concentration, g/m^3
C_{lo} – liquid discharge sulfide concentration, g/m^3
Q_g – volumetric gas flow rate, m^3/h
Q_{lo} – volumetric bioreactor liquid discharge flow rate, m^3/h
V_R – working volume of the bioreactor, m^3

[1]Department of Industrial Engineering, King Abdulaziz University, Jeddah, Saudi Arabia, corresponding author, e-mail: mzytoon@kau.edu.sa

[2]Department of Occupational Health and Air Pollution, High Institute of Public Health, Alexandria University, Alexandria, Egypt.

[3]Department of Chemical and Material Engineering, King Abdulaziz University, Jeddah, Saudi Arabia.

[4]Center of Excellence for Environmental Studies, King Abdulaziz University, Jeddah, Saudi Arabia.

1. INTRODUCTION

Emission of hydrogen sulfide occurs in many industrial activities. Today, several physico-chemical processes have been in application to remove H_2S from waste gas. However, these processes require a large energy input and high capital and operating costs, and produce secondary wastes that must be disposed off [1–7]. For these reasons, biological processes for the removal of H_2S are more attractive because they are believed to be inexpensive and cause no environmental pollution [3].

Biological treatment of H_2S-containing air streams in biofilters packed with natural microbial-rich beds [8] or using pure/mixed cultures of sulfide oxidizing bacteria (SOB) [2–5, 9–14] has been widely studied. However, these beds were limited to air streams with low concentrations of H_2S and the end product was sulfuric acid, sulfate or mixed sulfate/sulfur which needed further treatment.

Since elemental sulfur is favorable end product (for easiness of separation and marketing), many researches were directed to biological oxidation of H_2S to S^0. In some of these [15, 16] oxidation of H_2S to S^0 using phototrophic SOB was studied. However, operational problems arose such as insufficient light provision for all the bacteria because of the turbidity resulting from sulfur formation. Iron-based biological processes for treatment of H_2S-containing gases with S^0 as the end product have been studied [17–19]. The equipment consisted of two reactors, which increased the capital and operating costs of the process.

Bioconversion of H_2S to S^0 in biotrickling filters with synthetic packing materials [6] and in a biofilter packed with granular active carbon [20] was also investigated. In both studies conversion of H_2S to elemental sulfur could be achieved. However, the problem with these types of reactors is that the produced sulfur particles block pores of the packing material. Some studies were conducted on processes that overcome the aforementioned drawbacks. For instance, the technology of biological oxidation of sulfide to elemental sulfur using colorless autotrophic SOB in suspended-growth bioreactors was investigated [21, 22]. In these bioreactors, the inlet streams were sulfide-containing solutions rather than H_2S gas.

Among various bioreactor configurations airlift reactors may offer several advantages such as good mixing, better contact between microbial floc and substrate, as well as better controlled dissolved oxygen (DO) transfer at low DO [23]. Absence of stirring facilities, simple design, low requirements, good sterilization and easy maintenance are the main aspects of airlift reactors that caused their widespread application in different industries [24, 25].

The inlet streams for airlift bioreactors found in the literature were sulfide solutions [23, 26]. Therefore, the objective of the current paper was to study biological treatment of H_2S in an airlift bioreactor with direct injection of H_2S gas, particularly the effect of inlet gas concentration and loading rate, bioconversion end products, and the effect of temperature.

2. MATERIALS AND METHODS

Airlift bioreactor system. The bioreactor system consisted of three main sections: the airlift bioreactor, the sulfur settler and the H_2S-air preparation section (Fig. 1). The airlift bioreactor consisted of two concentric acrylic tubes. The outer tube length and inside diameter (ID) were 140 cm and 15 cm, respectively. The draft tube length and ID were 135 cm and 6 cm, respectively. The working volume was 24.74 dm^3. The upper part of the reactor (phase separator) was 30 cm long with 30 cm ID. The phase separator was filled up to 50% of its height making an additional volume of 10.6 dm^3. The outer tube of the airlift bioreactor was jacketed with a 20 cm ID acrylic tube for the purpose of temperature control. The bioreactor was supplied with several ports for inlet and outlet gas streams, nutrient supply, pH adjustment solutions, cell suspension circulation between the bioreactor and the settler, and pH/DO/temperature sensors.

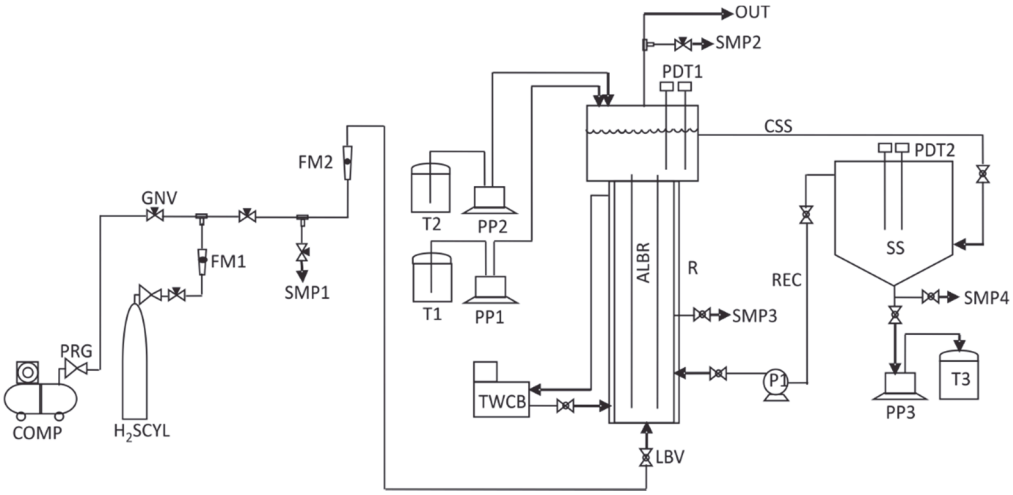

Fig. 1. Schematic of the bioreactor system: ALBR – air-lift bioreactor, COMP – air compressor, CSS – sell and sulfur suspension, FM – flow meter, GNV – gas needle valve, H_2SCYL – H_2S cylinder, LBV – liquid ball valve, OUT – outlet air to hood, P – circulation pump, PDT – pH/DO/temperature sensors, PP – peristaltic pump, PRG – pressure reducer and pressure gauge, REC – recycled cell suspension, SMP – gas/liquid sampling, SS – sulfur settler, T – tanks (1 – nutrient, 2 – HCl, 3 – sulfur sludge), TWCB – thermostated water circulation bath

The settler was an acrylic cylindrical tank 40 cm high, with 40 cm ID, having conical bottom 20 cm high. The sulfur/cell suspension was circulated between the bioreactor and the settler for separation of the formed sulfur. The settled sulfur slurry was withdrawn from the bottom of the cone for further treatment.

A compressor was used to deliver air at a predetermined flow rate. A stream of H_2S coming from a cylinder at a controlled flow rate was joined to the air stream to bring about H_2S of the calculated concentration. The combined stream was introduced to the

airlift bioreactor from the bottom and clean air was discharged from the top. Gas flow meters (Cole-Parmer EW-3227-08/28) were used to control air and H_2S flow rates and concentrations. Sampling ports existed prior to and after the bioreactor for continuous monitoring of H_2S concentration.

Microbial culture and nutrient medium. The SOB used in the bioreactor was an autotrophic mixed culture originated from an activated sludge sample (Bani Malik Sewage Treatment Plant). The bioreactor was inoculated with about 0.5 kg (wet basis) of the sludge sample. A thiosulfate nutrient solution for increasing biomass yield [1] was prepared to bring the concentrations (in g/dm^3) of nutrients inside the bioreactor to: $Na_2HPO_4 \cdot 7H_2O$ – 2.27, KH_2PO_4 – 1.8, $MgCl_2 \cdot 7H_2O$ – 0.1, $(NH_4)_2SO_4$ – 1.98, $MnCl_2 \cdot H_2O$ – 0.023, $CaCl_2$ – 0.03, $FeCl_3 \cdot 6H_2O$ – 0.033, Na_2CO_3 – 1.0 and $Na_2S_2O_3 \cdot 5H_2O$ – 15.69. Air was continuously supplied with a flow rate of 1.0 dm^3/min without circulation of the bioreactor solution for up to 3 days. After that, circulation of the bioreactor solution between the bioreactor and the settler started with continuous addition of the thiosulfate mineral solution (5 cm^3/min) and continuous withdrawal of the solids (S^0 and sludge residue) from the settler. Additional thiosulfate was added to the bioreactor on daily basis to insure sufficient supply for the developed SOB. It took about three weeks to decide that the SOB in the bioreactor was sufficient to start H_2S loading instead of the thiosulfate. This was decided when the thiosulfate consumption rate by the developed SOB reached a maximum value.

Operation of the bioreactor. The airlift bioreactor was operated for 143 days with H_2S as the feed sulfide source. H_2S in predetermined amounts was allowed to join a continuous stream of 1.0 dm^3 air/min before introduced to the bioreactor. During the study period, the concentration of H_2S in the air stream was increased gradually to increase the sulfide loading rate. The temperature of the bioreactor was controlled at 30 °C, except when studying the effect of temperature. pH was controlled most of the time at 7.5±0.3 by adding HCl or Na_2CO_3. In some occasions, the pH value decreased below 7.0 or increased over 8.0.

Hydrogen sulfide loading rate (*LR*), bioconversion capacity (*BC*) and H_2S gas removal efficiency (*RE*) of the bioreactor were calculated using the following equations:

$$LR = C_{gi} \frac{Q_g}{V_R} \tag{1}$$

$$BC = \frac{\left(C_{gi} - C_{go}\right) Q_g - C_{lo} Q_{lo}}{V} \tag{2}$$

$$RE = \frac{C_{gi} - C_{go}}{C_{gi}} \times 100\% \tag{3}$$

where C_{gi} and C_{go} are the inlet and outlet gaseous pollutant concentrations (g/m^3), C_{lo} is the liquid discharge sulfide concentration (g/m^3), Q_g is the volumetric gas flow rate (m^3/h), Q_{lo} is the volumetric bioreactor liquid discharge flow rate (m^3/h), and V_R is the working volume of the bioreactor (m^3).

Chemical analysis. Sulfate concentration was measured by the barium sulfate turbidimetric method [27], using a calibrated sulfate portable photometer (HANNA HI93751). Sulfide, thiosulfate and polysulfide concentrations were analyzed by potentiometric titration with silver nitrate as a titrant using an automatic titrator (848 Titrino Plus, Metrohm). Sulfide was determined using a calibrated silver/silver sulfide ion selective electrode, thiosulfate was determined using a calibrated iodide electrode and an Ag/AgCl reference electrode, and polysulfide was determined as thiosulfate after sulfitolysis as described in [28].

Measurement of pH and dissolved oxygen inside the bioreactor and the settler was carried out using an Orion 4-Star meter (Thermo Scientific) equipped with a calibrated ROSS Ultra pH electrode and a calibrated polarographic dissolved oxygen probe. Measurement of pH outside the bioreactor was carried out with a calibrated Handylab 1 pH--meter (Schott). Temperature was measured using either a Fisher Scientific digital thermometer or Orion 4 Star meter with a built-in thermometer attached to the pH electrode.

H_2S inlet and outlet concentrations were monitored by withdrawing air samples using glass syringes (0.5–10 cm^3) (Cole-Parmer) and diluting in a dual-valve Tedlar PVF bag (Cole-Parmer), with subsequent measurement using a calibrated H_2S gas detector (BW GasAlertMax XT). The method was validated by comparing 10 results from the dilution method with the equivalent concentrations determined by a chemical analysis method consisting of absorption of H_2S in zinc acetate followed by iodometric titration [27]. The average deviation from the chemical method was used to correct the concentrations calculated by the dilution method. In all experiments, a given concentration was the average of three measurements.

3. RESULTS AND DISCUSSION

3.1. REMOVAL EFFICIENCY AND BIOCONVERSION CAPACITY OF THE BIOREACTOR AT VARIOUS H_2S LOADING RATES

Inlet and outlet concentrations of H_2S as well as the removal efficiency during a 143-day period of operation are shown in Fig. 2. The inlet H_2S concentration was

increased gradually from 1000 ppm up to about 30 000 ppm over this period. At steady-state conditions gas removal efficiencies up to higher than 99% could be achieved at all inlet concentrations lower than 25 000 ppm. During the first few days after each increase in inlet concentration, the removal efficiency decreased and then gradually increased until reaching a maximum value after SOB acclimatization to the new inlet concentration or load. At this stage, the bioreactor was said to have reached the steady state at the inlet concentration in concern.

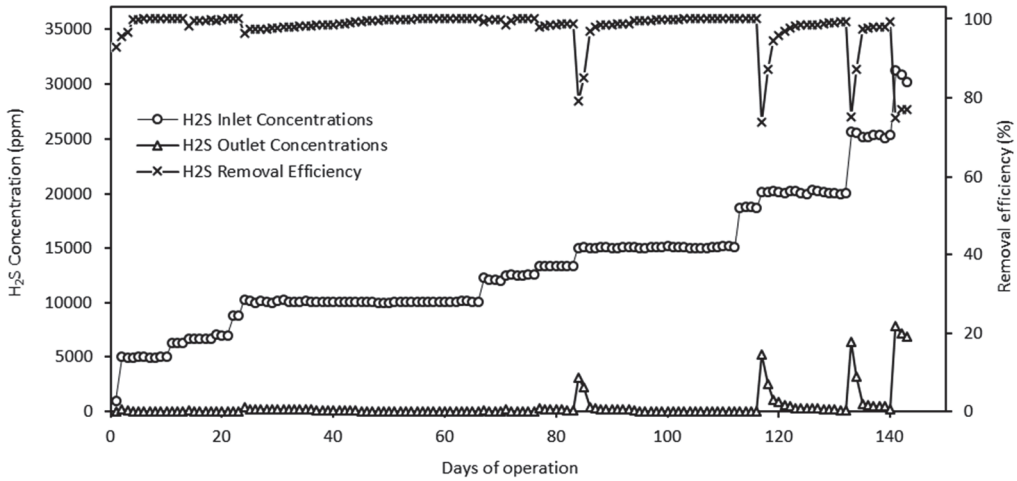

Fig. 2. Daily inlet and outlet H_2S gas concentration and bioreactor removal efficiency

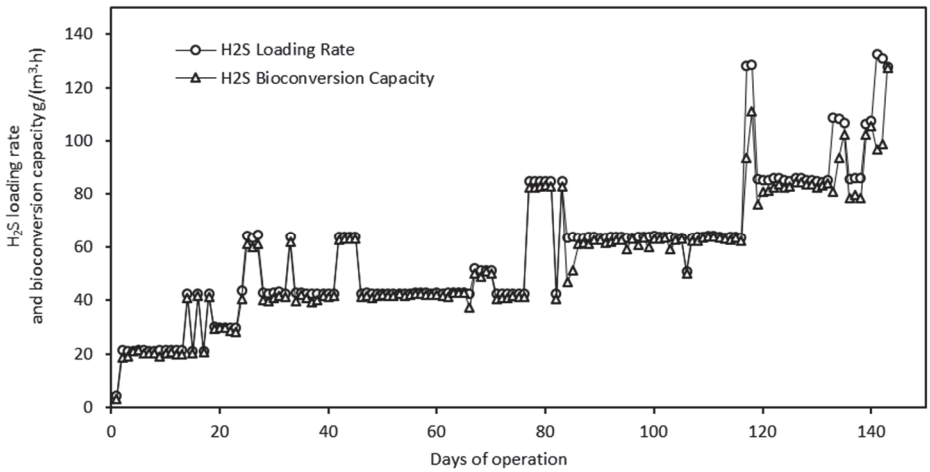

Fig. 3. Daily H_2S loading rate and bioreactor bioconversion capacity

The daily H_2S loading rate and bioconversion capacity of the bioreactor is shown in Fig. 3. Loading rates applied to the bioreactor were increased gradually from 4.2 up to 132.4 g/(m^3·h). Considering the data of steady-state operation, the correlation between elimination capacity and loading rate are presented in Fig. 4. The elimination capacity of the bioreactor increased as the loading rate increased. Almost complete bioconversion capacity was achieved at loading rates up to about 107 g/(m^3·h). At higher loading rates, slow increase in bioconversion capacity was observed up to the loading rate of about 128.5 g/(m^3·h). At this load, a maximum bioconversion capacity of 111.3 g/(m^3·h) was achieved. At higher loading rates, bioconversion capacity started decreasing.

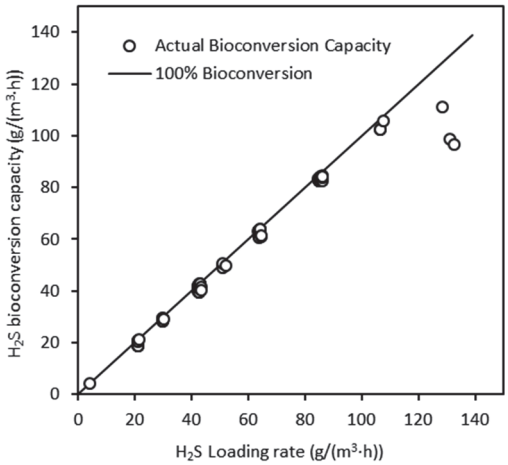

Fig. 4. Dependence of the bioreactor bioconversion capacity on the H_2S loading rate (steady-state data)

The decreasing trend of bioconversion capacity at high sulfide loading rates might be explained by at least one of the two governing steps in such a bioreactor type, being mass-transfer and biological activity. Mass-transfer of H_2S gas into the liquid phase is affected by several factors, the most important being the contact area and contact time. In the current airlift bioreactor, a gas sparger with 1 mm holes was used. However, the inlet air bubbles were increasing in diameter while they were moving upward the bioreactor outlet, resulting in decreased contact area between the gas and the liquid phase. This might decrease H_2S transfer to the liquid phase at high loading rates. Despite the use of a gas sparger with a smaller hole diameter will increase mass transfer, this will result in higher pressure drop across the bioreactor. Also, it will increase the chance of clogging by the formed sulfur particles and bioreactor failure may happen [29]. Therefore, other options to increase contact area, such as methods to break the air bubbles while moving upwards, may be recommended in future research.

On the other hand, biological activity might be affected at high loading rates by several factors. High H_2S loading rates might result in the accumulation of high sulfide

concentrations in the liquid phase which could inhibit metabolic process of the resident bacteria [23]. Also, the number of resident SOB might not be sufficient to completely consume the inlet sulfide. Furthermore, the excessive formation of sulfur particles at high loading rates might cause entrapment of some of the resident SOB which, in turn, will be lost with the settled sulfur particles. The excessive sulfur particles might also result in insufficient supply of H_2S and oxygen to the microorganisms because of diffusion limitation [2].

The maximum bioconversion capacities obtained in this study were found to be higher than those found by Kim et al. [2] and Potivichayanon et al. [3] who used fixed-film bioreactors with alginate beads and polypropylene pall rings, respectively. This implies that airlift bioreactors with suspended growth offer better contact between SOB and sulfide. On the other hand, the maximum bioconversion capacity was comparable to those found by Felho et al. [4], Ramírez et al. [5] and Rattanapan et al. [20] who used polyurethane foam or granulated active carbon as a SOB carrier. Although the bioreactors used in the latter two studies were of the fixed-film type, the high specific surface area of the carrier provided high contact area between the microorganisms and the sulfide. However, as mentioned earlier, these types of beds suffer from clogging by the formed sulfur. Authors who achieved better bioconversion capacity in bioreactors such as Moghanloo et al. [26] used sulfide solution rather than H_2S gas as a feed, making them more suitable for sulfide-containing wastewater.

3.2. H_2S BIOCONVERSION END PRODUCTS VERSUS INLET SULFIDE RATE

H_2S bioconversion end products (sulfate, thiosulfate and elemental sulfur) were monitored on a daily basis and their rates of formation as sulfate-sulfur, thiosulfate-sulfur and elemental sulfur are presented in Fig. 5. During the first 76 days of operation, sulfate formation rate was high while elemental sulfur formation rate was low, mainly because of the low inlet sulfide load (less than 55 $g/(m^3 \cdot h)$). On the other hand, during days 25–27, 33, 42–45 and 77–143, the sulfide load was increased, resulting in increased elemental sulfur formation rate at the expense of sulfate formation rate. This was visually detectable by the increased amount of settled sulfur in the settling tank and at the bioreactor bottom as well.

The bioreactor was capable of achieving up to 93.5% sulfide conversion to elemental sulfur at high inlet sulfide rate (higher than 106 $g/(m^3 \cdot h)$). Generally, higher than 90% conversion to elemental sulfur was observed at inlet sulfide loads higher than 85 $g/(m^3 \cdot h)$. The high rate of sulfide bioconversion to elemental sulfur at high inlet sulfide loads is related to the amount of available oxygen to the existing SOB. At lower H_2S loading rates, the DO concentration was up to about 2 mg/dm^3. The increasing H_2S loading rate was achieved by increasing H_2S inlet concentration at the expense of oxygen, resulting in decreasing DO concentration. For instance, the DO concentration was 0.17 mg/dm^3 at the inlet sulfide loading rate of 132 $g/(m^3 \cdot h)$.

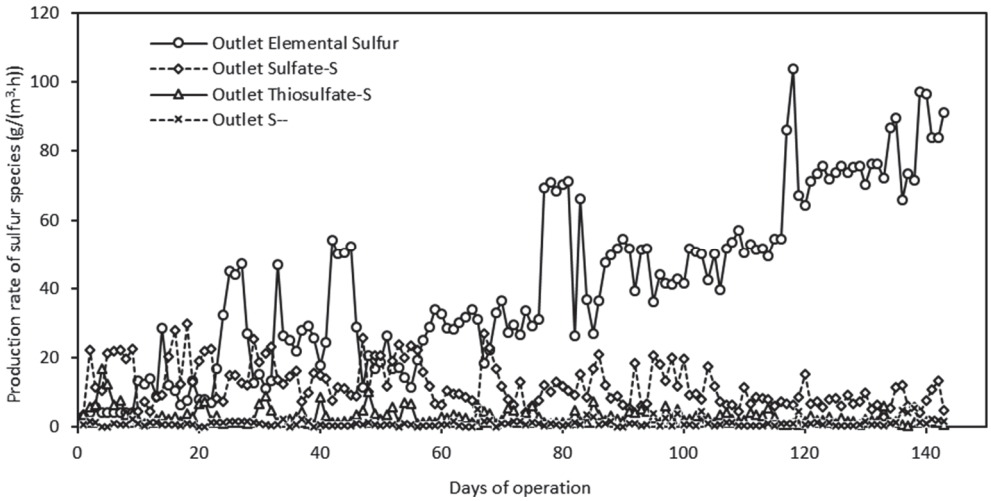

Fig. 5. Daily bioconversion of end products

According to Buisman et al. [21], the biological oxidation of sulfide to sulfate proceeds in two stages. In the first stage, proceeding faster than the second stage, sulfide loses two electrons and membrane-bound polymeric sulfur compounds are being formed (Eq. (4)). In the second step, this sulfur is oxidized to sulfite and then to sulfate (Eq. (5)). The higher oxidized forms are formed only if the amount of available oxygen is sufficient. If oxygen extent is controlled for achieving the first stage only, elemental sulfur will be the end product of the process

$$HS^- \xrightarrow{[O]+SOB} \text{membrane bound } [S^0] \leftrightarrow S^0 \tag{4}$$

$$\text{membrane bound } [S^0] \xrightarrow{[O]} SO_3^{2-} \xrightarrow{[O]} SO_4^{2-} \tag{5}$$

While sulfate is not preferred as the end product because of being a secondary pollutant, elemental sulfur (S^0) can be easily separated, transported and sold. Therefore, direction of bioconversion of H_2S towards formation of elemental sulfur is preferred. To achieve this in the current airlift bioreactor H_2S inlet concentrations should be higher than 20 000 ppm, which corresponds to loading rates higher than 85 g/(m^3·h) (at the flow rate 1 dm^3/min) and O_2/H_2S molar ratios lower than 8.

For air streams containing lower H_2S concentrations the percentage of elemental sulfur recovery will decrease due to higher DO concentrations. On the other hand, in absence of air (such as H_2S/CO_2 mixture) formation of elemental sulfur can be easily assured regardless of H_2S concentration. In such a case, a separate air stream may be supplied to the bioreactor at a controlled flow rate resulting in low DO concentration for elemental sulfur formation.

The results obtained in this study show that up to 93.5% bioconversion of H_2S to elemental sulfur was achieved, which is higher than the maximum 90% achieved by Lohwacharin and Annachhatre [23]. On the other hand, it is comparable to the 95% conversion to elemental sulfur reported by Fortuny et al. [6] and Henshaw and Zhu [16].

The rate of thiosulfate formation was almost the same, on average, over the whole period. Linear regression reveals the slope of –0.0004 for the thiosulfate-S formation rate over time, which is very close to zero, indicating minor change on average. This might be explained by the fact that thiosulfate is formed by autooxidation of sulfide rather than bio-oxidation. It was observed also that about 1.7%, on average, of the inlet sulfide was discharged as sulfide, which is consistent with the 2% reported by Fortuny et al. [6].

3.3. EFFECT OF TEMPERATURE ON THE BIOREACTOR PERFORMANCE

The temperature in the bioreactor may affect the performance in two ways. Solubility of H_2S gas in the liquid phase may be adversely affected by increasing the temperature. On the other hand, SOB performance may be improved by increasing the temperature up to a certain level. In this study, the effect of temperature on the bioreactor performance was studied at fixed high loading rate because at lower rates complete bioconversion at all temperatures might happen and the results would be misleading.

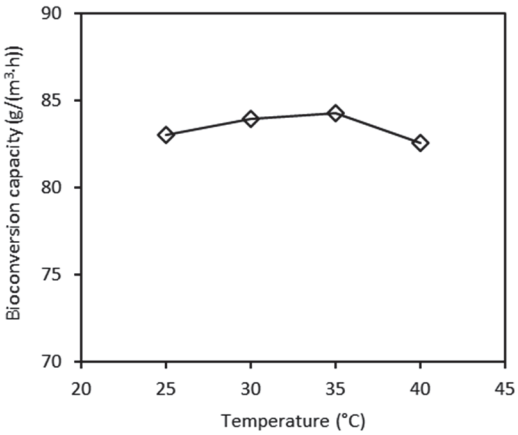

Fig. 6. Effect of temperature at the average loading rate of 85.6 g/(m^3·h)

Figure 6 shows that at H_2S loading rate of about 85.6 g/(m^3·h), the bioconversion capacity of the bioreactor slightly increased from 83.0 up to 84.2 g/(m^3·h) when the temperature increased from 25 up to 35 °C. At a higher temperature (40 °C), the bioconversion capacity decreased to 82.6 g/(m^3·h). Therefore, the optimum operating range of temperature was 30–35 °C, which is similar to that found by Moghanloo et al. [26].

The slight variations in the bioconversion capacity at the studied temperature range might be explained by the fact that the resident SOB was a mixed culture that was capable of adaptation to the whole mesophilic temperature range (20–40 °C).

4. CONCLUSION

Biological treatment of hydrogen sulfide in airlift bioreactors with direct injection of the gas could be an efficient choice for air streams with high concentrations. The current bioreactor was able to completely remove H_2S concentrations as high as 25 000 ppm. Maximum bioconversion capacity of about 111.3 g/(m^3·h) was achieved and up to 93.5% conversion of the inlet sulfide to elemental sulfur could be attained.

The maximum bioconversion capacity of the bioreactor is governed by two main issues: mass-transfer and biological activity. To further improve the bioreactor performance, design and operational factors influencing these two issues should be investigated.

ACKNOWLEDGEMENT

This project was funded by the Ministry of Higher Education (MOHE), Saudi Arabia under the grant number (1/A/3). The authors would like to thank MOHE and the King Abdulaziz University – Deanship of Scientific Research, for technical and financial support.

REFERENCES

[1] OYARZÚN P., ARANCIBIA F., CANALES C., AROCA G.E., *Biofiltration of high concentration of hydrogen sulphide using Thiobacillus Thioparus*, Process Biochem., 2003, 39, 165.

[2] KIM J.H., RENE E.R., PARK H.S., *Biological oxidation of hydrogen sulfide under steady and transient state conditions in an immobilized cell biofilter*, Bioresour., Technol., 2008, 99, 583.

[3] POTIVICHAYANON S., POKETHITIYOOK P., KRUATRACHUE M., *Hydrogen sulfide removal by a novel fixed-film bioscrubber system*, Process Biochem., 2006, 41, 708.

[4] FILHO J.L.R.P., SADER L.T., DAMIANOVIC M.H.R.Z., FORESTI E., SILVA E.L., *Performance evaluation of packing materials in the removal of hydrogen sulphide in gas-phase biofilters. Polyurethane foam, sugarcane bagasse, and coconut fibre*, Chem. Eng. J., 2008, 158, 441.

[5] RAMÍREZ M., GÓMEZ J.M., AROCA G., CANTERO D., *Removal of hydrogen sulfide by immobilized thiobacillus thioparus in a biotrickling filter packed with polyurethane foam*, Bioresour. Technol., 2009, 100, 4989.

[6] FORTUNY M., BAEZA J.A., GAMISANS X., CASAS C., LAFUENTE J., DESHUSSES M.A., GABRIEL D., *Biological sweetening of energy gases mimics in biotrickling filters*, Chemosphere, 2008, 71, 10.

[7] PARK D., LEE D.S., JOUNG J.Y., PARK J.M., *Comparison of different bioreactor systems for indirect H_2S removal using iron-oxidizing bacteria*, Process Biochem., 2005, 40, 1461.

[8] KIM K.S., CHUNG W.J., OH Y.S., *Dynamic behavior of compost biofilters during periods of starvation and fluctuating hydrogen sulfide loadings*, J. Environ. Sci. Health, 2004, A39, 299.

[9] GABRIEL D., DESHUSSES M.A., *Performance of a full-scale biotrickling filter treating H_2S at a gas contact time of 1.6 to 2.2 seconds*, Environ. Prog., 2003, 22, 111.

[10] KIM S., DESHUSSES M.A., *Development and experimental validation of a conceptual model for bio-trckling filtration of* H_2S, Environ. Prog., 2003, 22, 119.
[11] PARK D.H., CHA J.M., RYU H.W., LEE G.W., YU E.Y., RHEE J.I., PARK J.J., KIM S.W., LEE I.W., JOE Y.I., RYU Y.W., HUR B.K., PARK J.K., PARK, K., *Hydrogen sulfide removal utilizing immobilized Thiobacillus sp. IW with Ca-alginate bead*, Biochem. Eng. J., 2002, 11, 167.
[12] SHINABE K., OKETANI S., OCHI T., KANCHANATAWEE S., MATSUMURA M., *Characteristics of hydrogen sulfide removal in a carrier-packed biological deodorization system*, Biochem. Eng. J., 2000, 5, 209.
[13] DUAN H., YAN R., CHOON L., KOE C., WANG X., *Combined effect of adsorption and biodegradation of biological activated carbon on* H_2S *biotrickling filtration*, Chemosphere, 2007, 66, 1684.
[14] DUAN H., KOE L.C.C., YAN R., CHEN X., *Biological treatment of* H_2S *using pellet activated carbon as a carrier of microorganisms in a biofilte*r, Water Res., 2006, 40, 2629.
[15] FERRERA I., SANCHEZ O., MAS J., *A new non-aerated illuminated packed-column reactor for the development of sulfide-oxidizing biofilms*, Appl. Microbiol. Biotechnol., 2004, 64, 659.
[16] HENSHAW P.F., ZHU W., *Biological conversion of hydrogen sulphide to elemental sulphur in a fixed--film continuous flow photo-reactor*, Water Res., 2001, 35, 3605.
[17] EBRAHIMI S., MORALES F.J.F., KLEEREBEZEM R., HEIJNEN J.J., VAN LOOSDRECHT M.C.M., *High-rate acidophilic ferrous iron oxidation in a biofilm airlift reactor and the role of the carrier material*, Biotechnol. Bioeng., 2005, 90, 462.
[18] SON H.J., LEE J.H., *H_2S removal with an immobilized cell hybrid reactor*, Process Biochem., 2005, 40, 2197.
[19] PAGELLA C., DE FAVERI D.M., *H_2S gas treatment by iron bioprocess*, Chem. Eng. Sci., 2000, 55, 2185.
[20] RATTANAPAN C., BOONSAWANG P., KANTACHOTE D., *Removal of H_2S in down-flow GAC biofiltration using sulfide oxidizing bacteria from concentrated latex wastewater*, Bioresour. Technol., 2009, 100, 125.
[21] BUISMAN C.J.N., GERAATS B.G., IJSPEERT P., LETTINGA G., *Optimization of sulphur production in a biotechnological sulphide-removing reactor*, Biotechnol. Bioeng., 1990, 35, 50.
[22] KRISHNAKUMAR B., MAJUMDAR S., MANILAL V.B., HARIDAS A., *Treatment of sulphide containing wastewater with sulphur recovery in a novel reverse fluidized loop reactor (RFLR*), Water Res., 2005, 39, 639.
[23] LOHWACHARIN J., ANNACHHATRE A.P., *Biological sulfide oxidation in an airlift bioreactor*, Bioresour. Technol., 2010, 101, 2114.
[24] YAZDIAN F., SHOJAOSADATI S.A., NOSRATI M., PESARAN HAJIABBAS M., VASHEGHANI-FARAHANI E., *Investigation of gas properties, design, and operational parameters on hydrodynamic characteristics, mass transfer, and biomass production from natural gas in an external airlift loop bioreactor*, Chem. Eng. Sci., 2009, 64, 2455.
[25] CHOI K.H., *Effects of liquid level above downcomer on hydrodynamic characteristics of external-loop airlift reactor*, Chem. Eng. Commun., 2007, 194, 1215.
[26] MOJARRAD MOGHANLOO G.M., FATEHIFAR E., SAEDY S., AGHAEIFAR Z., ABBASNEZHAD H., *Biological oxidation of hydrogen sulfide in mineral media using a biofilm airlift suspension reactor*, Bioresour. Technol., 2010, 101, 8330.
[27] APHA, *Standard Methods for the Examination of Water and Wastewater*, 21st Ed., American Public Health Association, Washington DC, 2005.
[28] SATAKE H., HISANO T., IKEDA S., *The rapid determination of sulfide, thiosulfate, and polysulfide in the lixiviation water of blast-furnace slag by means of argentometric potentiometric titration*, Bull. Chem. Soc. Jpn., 1981, 54, 1968.
[29] ZYTOON M.A., EL-SHAZLY A.H., NOWEIR M.H., AL-ZAHRANI A.A., *Quantitative safety analysis of a lab-scale bioreactor for hydrogen sulfide biotreatment using fault tree analysis*, Process Saf. Prog., 2013, 32, 376.